Digitized Automation for a Changing World

Delta Heavy Duty Vector Control Drive CH2000 Series

reddot design award
winner 2010

www.deltaww.com

DELTA
Smarter. Greener. Together.

CH2000 Power in Hand

With years of experience and expertise in drive technology, Delta presents its new AC motor drive, the CH2000 Series, providing high performance with robust design. It is equipped with a larger starting torque and high overload capabilities to fulfill the needs of heavy load applications and to handle sudden load impact conditions.

The CH2000 Series is designed with a high tolerance for critical environments, especially for heavy load applications. Featuring outstanding controls for all fields and system performance improvements, the CH2000 Series offers exceptional quality and comprehensive services.

Introducing the CH2000 Series heavy load field-oriented vector control drive to enhance your competitive advantage for achieving greater success.

Table of Contents

Functions and Applications 3

Standard Models
Excellent Drive Control
Excellent Overload Capability
Fast Response to Load Impact
Large Starting Torque
Flexible Torque and Current Limit Settings
Deceleration Energy Backup (DEB)
Industrial Applications
Modular Design
High-Speed Network
Intelligent PLC Functions
Permanent Magnet (PM) Motor Applications
Excellent Environment Adaptability

Specifications 12

Environment for Operation, Storage and Transportation
Operation Temperature and Protection Level
Product Specifications
General Specifications

Wiring 15

Dimensions 18

Accessories 27

Ordering Information 33

Model Name Explanation 34

Standard Models (IP20/NEMA1)

Power range: 230V 0.75~75 kW, 460V 0.75~280 kW

230V (kW)	0.75	1.5	2.2	3.7	5.5	7.5	11	15	18.5	22	30	37	45	55	75
230V (HP)	1	2	3	5	7.5	10	15	20	25	30	40	50	60	75	100
Output (A)	5	8	11	17	25	33	49	65	75	90	120	146	180	215	255
Frame Size	A				B			C		D			E		F
Braking Chopper	Built-in										Optional				
DC Reactor	Optional										Built-in				
EMC Filter	Optional														
Protection Level	21 (IP20, NEMA1)										00 (IP00, UL Open Type)/ 21 (IP20, NEMA1)				

460V (kW)	0.75	1.5	2.2	3.7	5.5	7.5	11	15	18.5	22	30	37	45	55	75	90	110
460V (HP)	1	2	3	5	7.5	10	15	20	25	30	40	50	60	75	100	125	150
Output (A)	3	4	6	9	12	18	24	32	38	45	60	73	91	110	150	180	220
Frame Size	A					B			C			D0	D			E	
Braking Chopper	Built-in											Option					
DC Reactor	Optional											Built-i					
EMC Filter	Built-in (CH4EA Models)											Option					
Protection Level	21 (IP20, NEMA1)											00 (IP00, UL Open Type					

Advanced Drive Controls

High Performance

1. Large starting torque
2. High overload capability
3. Super heavy duty setting
4. Fast response to load impact
5. A drive for both asynchronous and synchronous motors

Flexible Applications

1. Control modes for speed, torque, position and synchronous control
2. Built-in PLC functions
3. Excellent 4-quadrant torque control and limit
4. Noise reduction operation

132	160	185	220	280
175	215	250	300	375
250	310	370	440	550
F	G			H
al				
n				
al				
)/21 (IP20, NEMA1)				

Modular Design

1. Hot pluggable LCD keypad
2. I/O extension card options
3. PG card options
4. Network cards for fieldbus modules
5. Removable fan

Adaptability to Critical Environments

1. 50°C operating temperature
2. Built-in DC reactor*
3. Coated circuit boards
4. Built-in EMC filter*
5. International safety standard (CE/UL/cUL)

*Note: Please refer to product specifications for more details

Excellent Overload Capability

The super heavy duty setting is suitable for harsh environment applications with a current overload capability of 150% for 60 seconds and 200% for 3 seconds.

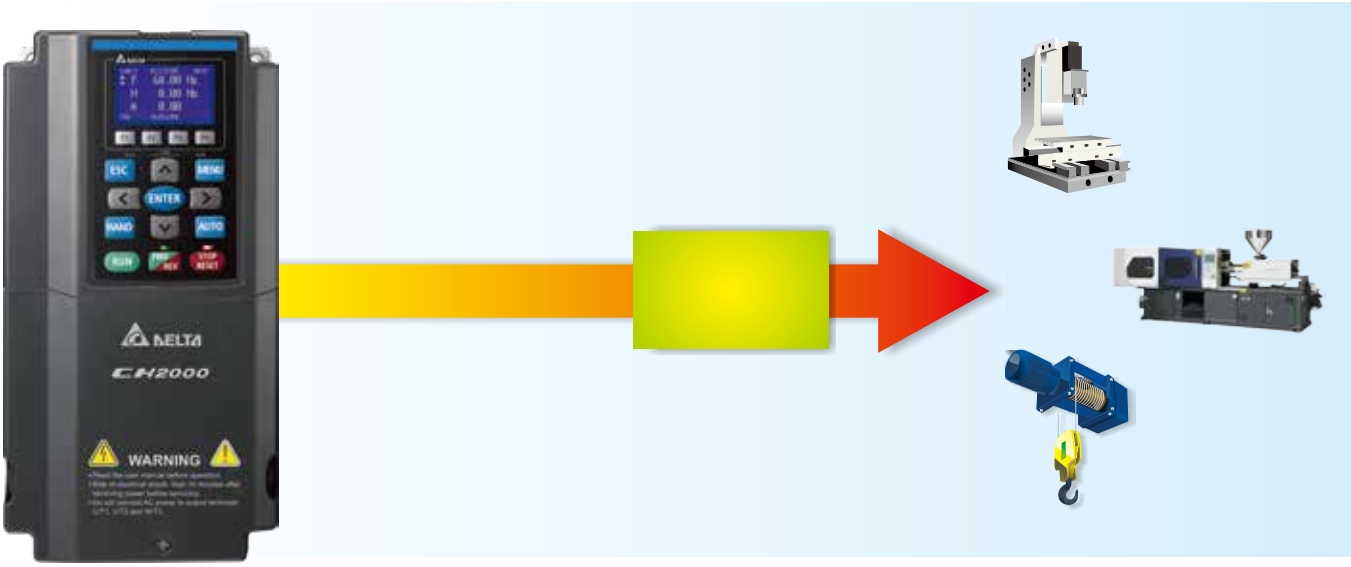

Fast Response to Load Impact

Response to sudden load impact

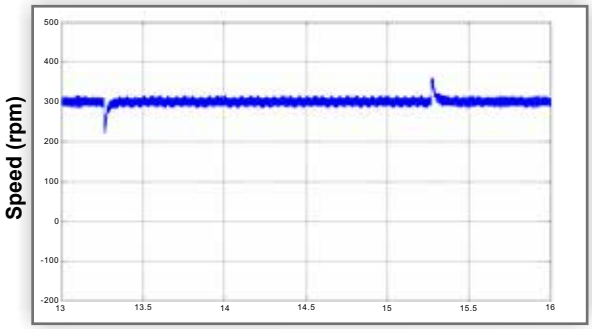

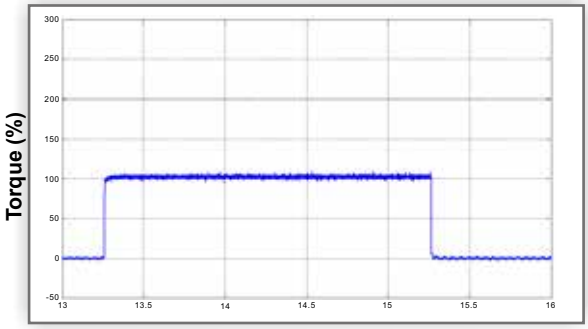

Large Starting Torque

Large starting torque output up to 200% at very low speed under FOC + PG mode.

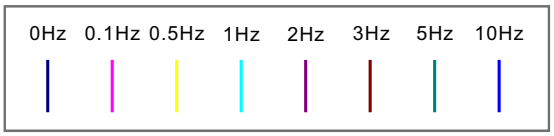

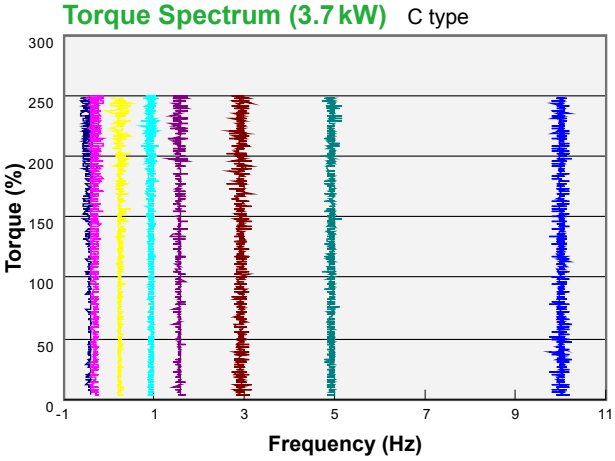

Flexible Torque and Current Limit Settings

Prevents equipment damage from load impact. When the drive is in FOC control mode, setting torque limit can protect the machinery under many conditions.

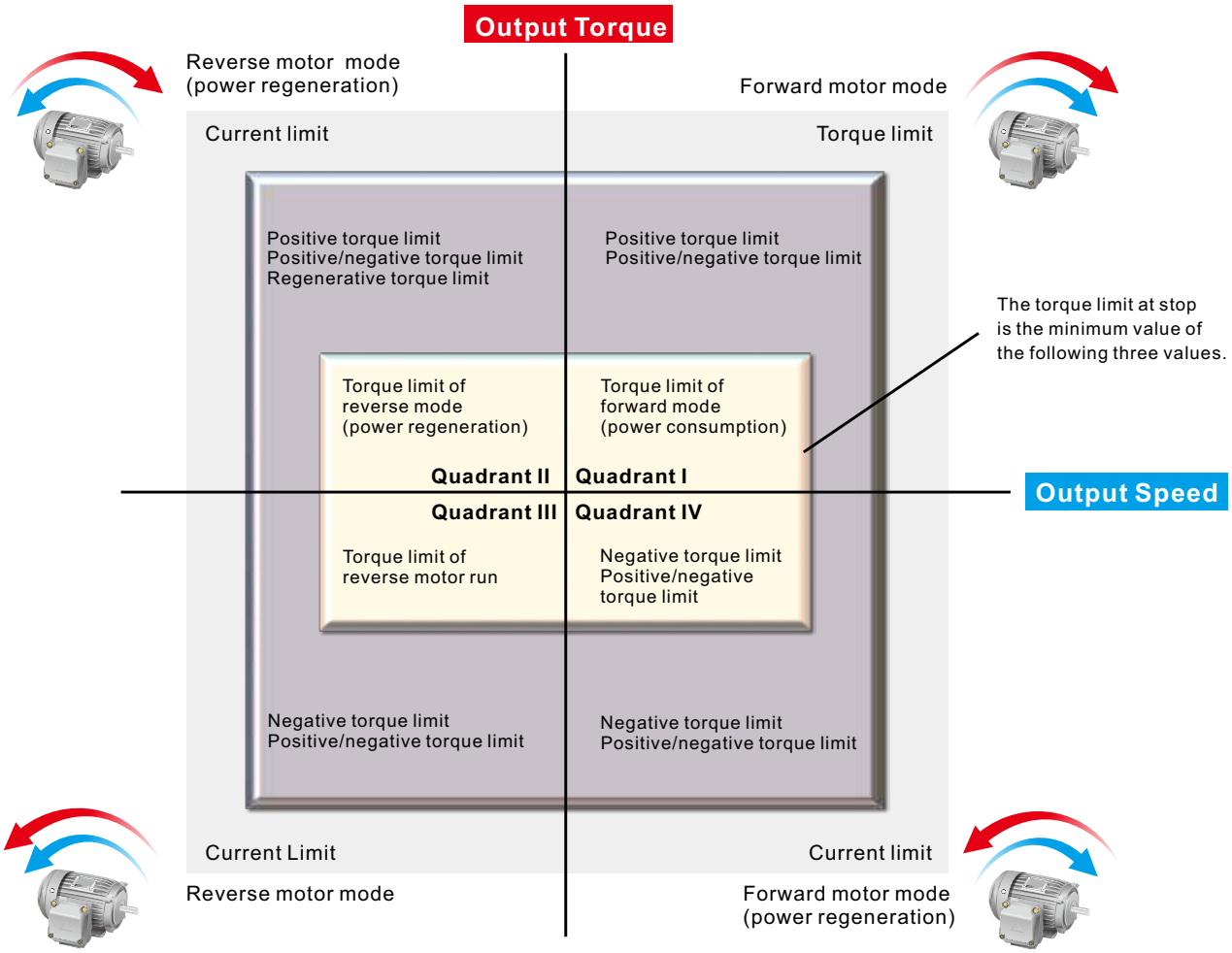

Deceleration Energy Backup (DEB)

Controls the motor's deceleration to a stop when a sudden power outage occurs and accelerates it to its previous operation speed when power returns.

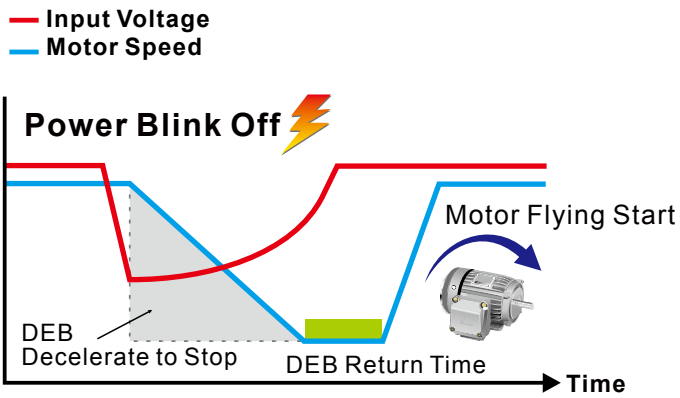

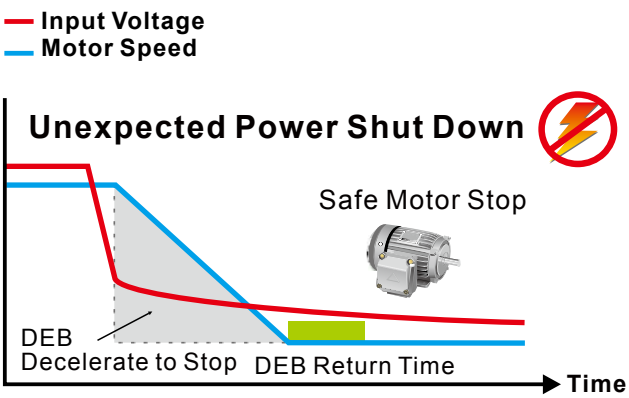

Industrial Applications

Speed Synchronizing

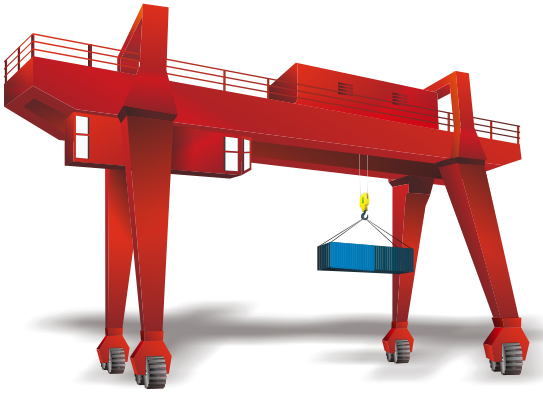

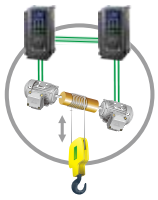

Load Sharing

Delta Power Regenerative Unit REG2000 Series

Provides the crane and hoist system four-quadrant operation and energy saving performance with the power regeneration function.

CNC Application (C-axis)

The CH2000 provides position control and pulse wave velocity following functions for C-axis applications with high overload capability providing excellent performance for high-speed rigid tapping

Delta Active Front End AFE2000 Series

Provides the crane and hoist system excellent operation quality with reduced torque ripple, harmonic suppression, high power factors and energy saving performance with the power regeneration function.

Advanced Crane Function

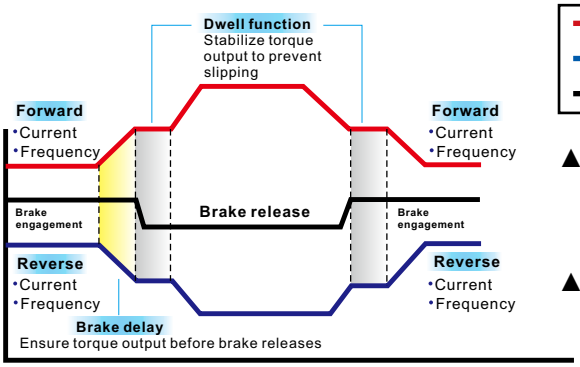

- Forward Output Frequency
- Reverse Output Frequency
- Mechanical Brake Action

▲ Mechanical brake control

8 independent brake control setting to different criteria. High flexibility to meet complex application needs and ensure operation safety.

▲ Advanced crane time sequence

Brake delay and dwell function ensure smooth operation.

Fast Response to Load Impact

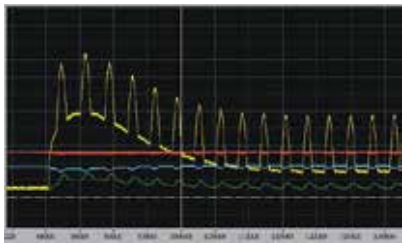

High endurance. Maintains a stable DC bus voltage when load impact occurs.

Tension Control

Torque Ripple

Other Delta Products

CH2000

CH2000+AFE2000

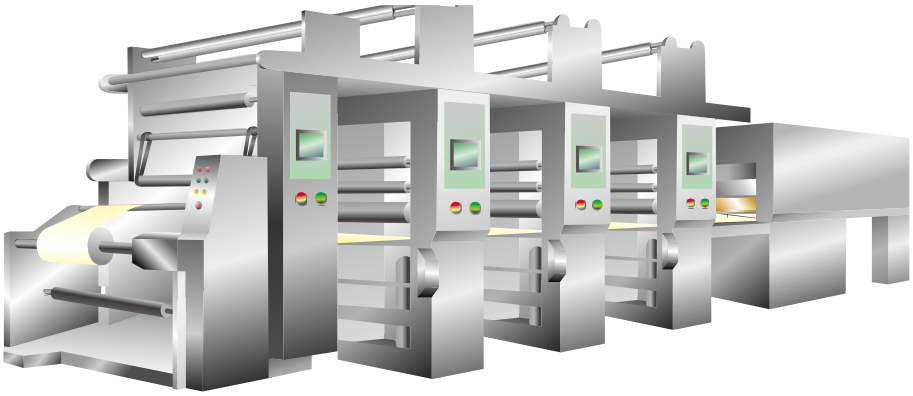

Modular Design

Modular design for high flexibility for system design and maintenance.
Various accessories are available such as I/O extension cards, encoder feedback cards, communication cards, a hot pluggable LCD keypad, removable terminals and a removable fan.

EMC-PG01O/EMC-PG02O

EMC-PG01U/EMC-PG02U

EMC-PG01L/EMC-PG02L

EMC-PG01R

▶ **PG Feedback Cards**

EMC-R6AA

EMC-D42A

EMC-D611A

EMC-A22A

▶ **I/O Extension Cards**

EMC-BPS01

▶ **Power Shift Cards**

- KPC-CC01 keypad
- Standard RJ45 network cable for remote operation
- Easy to remove with one press

- RFI Jumper

- Remove the safety screws and press on both side tabs to remove the cover

- Modular fan design is easy to clean and replace to provide longer service life

- The product nameplate shows input/output voltage, input/output current, frequency range, and more

▼ **Communication Cards**

CMC-EC01

CMC-PD01

CMC-DN01

CMC-MOD01
CMC-EIP01

EMC-COP01

Removable terminals

Easy to wire with high safety

Analog I/O switch

Termination resistor

Dual RJ45 communication ports

High-Speed Network

- Provides optional MODBUS RTU and various fieldbus cards for flexible communication applications
- Advanced network functions
- Built-in MODBUS communication interface

CANopen (DS402)

Ability to control up to 8 Slave drives via the CANopen Master function

- Supports all Delta industrial automation products (Built-in EDS files for all Delta industrial automation products)
- I/O data configurations for each device on the CANopen network
- Motion control planning function
- WPLSoft (Software)

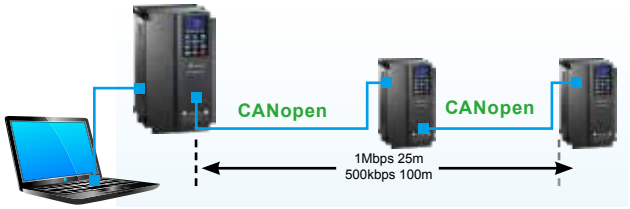

- TAP-CN03 distribution box for long distances

- RJ45 cable

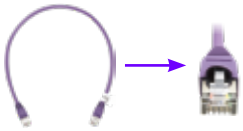

DeviceNet

Through the Delta specially designed DeviceNet Builder software, users can easily establish a standard DeviceNet control network by the parameter pre-assignment function for each device and remote I/O.

- Supports all Delta industrial automation products (Built-in EDS files for all Delta industrial automation products)
- I/O data configurations for each device on the DeviceNet network
- DeviceNet layout software

EtherNet/IP

MODBUS TCP

Delta provides communication integrator software that offers graphic module settings and a user friendly interface to support all Ethernet products settings and online monitoring.

- Delta software for Ethernet/MODBUS TCP products
- Graphic module setting and a user friendly interface
- Auto search function
- Supports Virtual COM settings

Intelligent PLC Functions

- Built-in 10K steps capacity of PLC functions. Distributed control and independent operation are easily achieved via network connection.
- CANopen Master protocol and PLC functions provide synchronous control and fast data exchange.

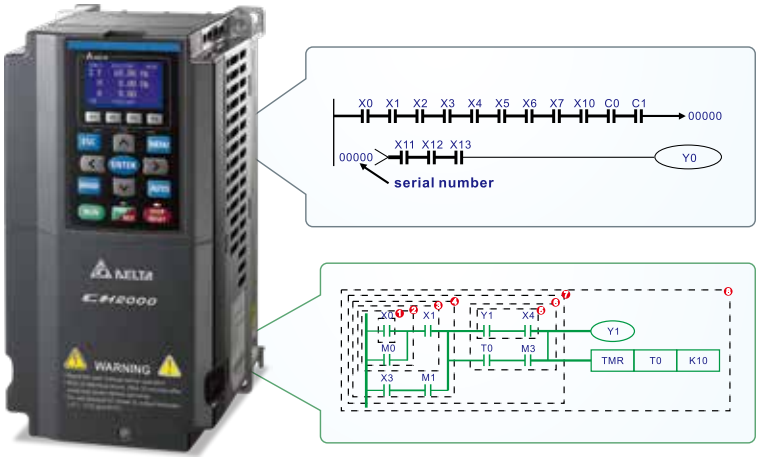

A Drive for Permanent Magnet (PM) Motors

The CH2000 Series can control both induction and permanent magnet (PM) motors.
The benefits of using PM motors include dynamic response and precise position/speed/torque control.

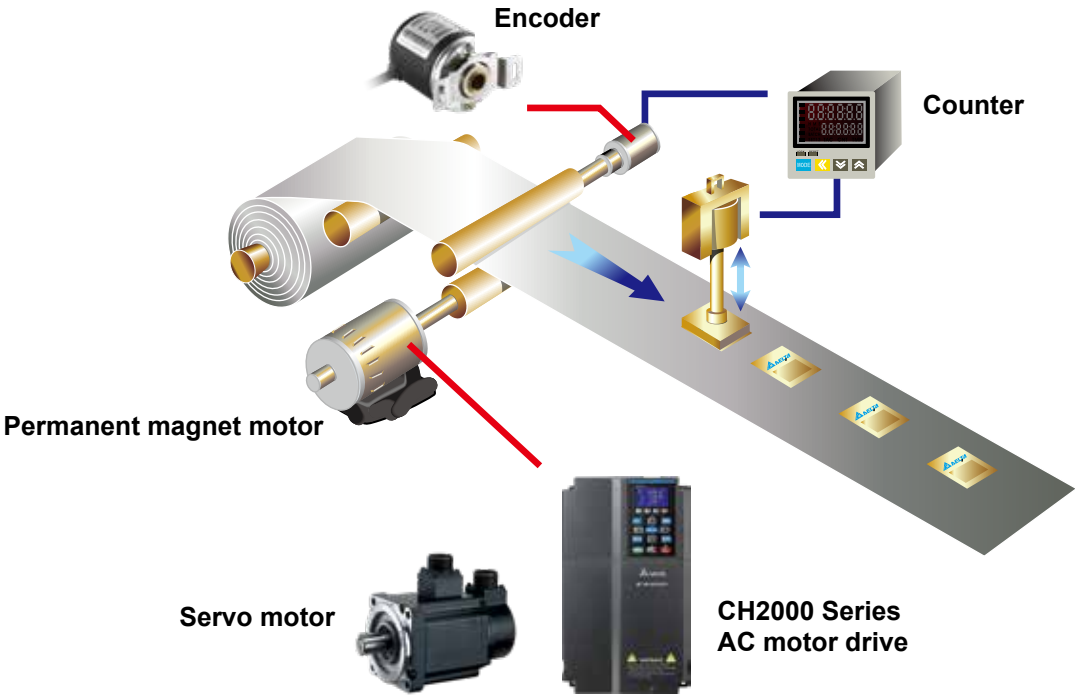

Excellent Environment Adaptability

- Built-in DC choke*
- Built-in EMC filter
- Enhanced conformal coating on PCBs for safe operation in harsh environment applications
- Isolation design of heat dissipation system separate from other drive components
- There are two heat dissipating methods:
  (1) Flange mounting method helps disperse heat out of the drive
  (2) Cooling fan design fan provides cold air to the aluminum heat sink

  Both methods are efficient and provide users with flexible options according to their working environment needs.

*Note: Please refer to the Product Specification

Specifications

Environment for Operation, Storage and Transportation

DO NOT expose the AC motor drive to harsh environments, such as dust, direct sunlight, corrosive/flammable gasses, humidity, liquid or vibrations. The salts in the air must be less than 0.01mg/cm² per year.

Environment	**Installation Location**	IEC60364-1/IEC60664-1 Pollution degree 2, indoor use only	
	Surrounding Temperature (°C)	Storage/Transportation	-25 ~ 70
		Only allowed at non-condensation, non-frost, non-conductive environment.	
	Rated Humidity	Operation	Max. 95%
		Storage/Transportation	Max. 95%
		No condense water	
	Air Pressure (kPa)	Operation/Storage	86 ~ 106
		Transportation	70 ~ 106
	Pollution Level	IEC60721-3-3	
		Operation	Class 3C3; Class 3S2
		Storage	Class 1C2; Class 1S2
		Transportation	Class 2C2; Class 2S2
		Only allowed at non-condensation, non-frost, non-conductive environment.	
	Altitude	Operation	If the AC motor drive is installed at an altitude 0~1000m, follow normal operation restriction. If it is installed at altitude 1000~3000m, decrease 1% of rated current or lower 0.5°C of temperature for every 100m increase in altitude. Maximum altitude for Corner Grounded TN system is 2000m; for application over 2000m, please contact Delta for more details.
Package Drop		Storage/Transportation	ISTA procedure 1A(according to weight) IEC60068-2-31
Vibration		1.0mm, peak to peak value range from 2Hz to 13.2 Hz; 0.7G~1.0G range from 13.2Hz to 55Hz; 1.0G range from 55Hz to 512 Hz. Comply with IEC 60068-2-6.	
Impact		IEC/EN 60068-2-27	
Operation Position		Max. allowed offset angle ±10° (under normal installation position)	

Operation Temperature and Protection Level

Model	Frame	Top Cover	Conduit Box	Protection Level	OperationTemperature
VFDxxxxCHxxx-21	Frame A~C 230V: 0.75~18.5 kW 460V: 0.75~30 kW	Remove top cover	Standard conduit plate	IP20/UL Open Type	SHD: -10°C ~ 50°C
		Standard with top cover		IP20/UL Type1/NEMA1	SHD: -10°C ~ 40°C
	Frame D~H 230V: 22 kW and above 460V: 37 kW and above	N/A	Conduit box	IP20/UL Type1/NEMA1	SHD: -10°C ~ 40°C
VFDxxxxCHxxx-00	Frame D~H 230V: 22 kW and above 460V: 37 kW and above	N/A	Without standard conduit box	IP00 IP20/UL Open Type Protection degree for the circled area is IP00; other areas are IP20	SHD: -10°C ~ 50°C

Specifications

230 V																
Frame Size		A				B			C		D			E		F
Model VFD-□□□CH23A-□□		007	015	022	037	055	075	110	150	185	220	300	370	450	550	750
Applicable Motor Output (kW)		0.75	1.5	2.2	3.7	5.5	7.5	11	15	18.5	22	30	37	45	55	75
Applicable Motor Output (HP)		1	2	3	5	7.5	10	15	20	25	30	40	50	60	75	100
Output Rating SUPER HEAVY DUTY	Rate Output Capacity (kVA)	2.0	3.2	4.4	6.8	10	13	20	26	30	36	48	58	72	86	102
	Rated Output Current (A)	5	8	11	17	25	33	49	65	75	90	105	146	180	215	255
	Carrier Frequency (kHz)	5~15kHz														
	Overload Tolerance	150% of rated current: 1 minute for every 5 minutes 200% of rated current: 3 seconds for every 30 seconds														
Input Rating	Input Current (A) Super Heavy Duty	6.4	12	16	20	28	36	52	72	83	99	124	143	171	206	245
	Rated Voltage/Frequency	3-phase AC 200V~240V (-15%~+10%), 50/60Hz														
	Operating Voltage Range	170~265V_{AC}														
	Frequency Tolerance	47~63Hz														
AC Drive Weight		2.6±0.3Kg				5.4±1Kg			9.8±1.5Kg		38.5±1.5Kg			64.8±1.5Kg		86.5±1.5Kg
Cooling Method		Natural cooling	Fan cooling													
Braking Chopper		Frame A to C (built-in); Frame D and above (optional)														
DC Reactor		Frame A to C (optional); Frame D and above (built-in)														
EMC Filter		Optional														
EMC-COP01		Optional														

460 V												
Frame Size		A					B			C		
Model VFD-□□□CH43□-□□		007	015	022	037	055	075	110	150	185	220	300
Applicable Motor Output (kW)		0.75	1.5	2.2	3.7	5.5	7.5	11	15	18.5	22	30
Applicable Motor Output (HP)		1	2	3	5	7.5	10	15	20	25	30	40
Output Rating SUPER HEAVY DUTY	Rate Output Capacity (kVA)	2.0	3.2	4.8	7.2	9.6	14	19	25	30	36	48
	Rated Output Current (A)	3	4	6	9	12	18	24	32	38	45	60
	Carrier Frequency (kHz)	5~15kHz										
	Overload Tolerance	150% of rated current: 1 minute for every 5 minutes 200% of rated current: 3 seconds for every 30 seconds										
Input Rating	Input Current (A) Super Heavy Duty	4.3	5.9	8.7	14	17	20	26	35	40	47	63
	Rated Voltage/Frequency	3-phase AC 380V~480V (-15%~+10%), 50/60Hz										
	Operating Voltage Range	323~528VAC										
	Frequency Tolerance	47~63Hz										
AC Drive Weight		2.6±0.3Kg					5.4±1Kg			9.8±1.5Kg		
Cooling Method		Natural cooling	Fan cooling									
Braking Chopper		Frame A to C (built-in); Frame D and above (optional)										
DC Reactor		Frame A to C (optional); Frame D and above (built-in)										
EMC Filter		Frame A~C, VFD□□□□CH4EA-21, EMC filter built-in Frame A~C, VFD□□□□CH43A-21, No EMC filter										
EMC-COP01		Optional										

460V												
Frame Size		D0	D			E		F	G			H
Model VFD-□□□□CH43□-□□		370	450	550	750	900	1100	1320	1600	1850	2200	2800
Applicable Motor Output (kW)		37	45	55	75	90	110	132	160	185	220	280
Applicable Motor Output (hp)		50	60	75	100	125	150	175	215	250	300	375
Output Rating SUPER HEAVY DUTY	Rate Output Capacity (kVA)	58	73	88	120	143	175	199	247	295	359	438
	Rated Output Current (A)	73	91	110	150	180	220	250	310	370	440	550
	Carrier Frequency (kHz)	5~15kHz										
	Overload Tolerance	150% of rated current: 1 minute for every 5 minutes 200% of rated current: 3 seconds for every 30 seconds										
Input Rating	Input Current (A) Super Heavy Duty	74	101	114	157	167	207	240	300	380	400	494
	Rated Voltage/Frequency	3 Phase AC 380V~480V (-15%~+10%), 50/60Hz										
	Operating Voltage Range	323~528V_{AC}										
	Frequency Tolerance	47~63Hz										
AC Drive Weight		38.5±1.5Kg				64.8±1.5Kg		86.5±1.5Kg	134±4Kg			257±12Kg
Cooling Method		Fan cooling										
Braking Chopper		Frame D and above (optional)										
DC Reactor		Frame D and above (built-in)										
EMC Filter		Frame D and above (Optional)										
EMC-COP01		Optional										

General Specifications

Control Characteristics	Control Method	1: V/F, 2: SVC, 3: VF+PG, 4: FOC+PG, 5: TQC+PG,
	Starting Torque	Reach up to 200% or above at 0.5Hz. Under FOC+PG mode, starting torque can reach 200% at 0Hz.
	V/F Curve	4 point adjustable V/F curve and square curve
	Speed Response Ability	5Hz (vector control can reach up to 40Hz)
	Torque Limit	Super heavy duty 220% torgue current
	Torque Accuracy at TQC Mode	±5%
	Max. Output Frequency (Hz)	Super Heavy Duty: 0.00~599.00Hz
	Frequency Output Accuracy	Digital command: 0.01%, -10°C~+40°C, Analog command: 0.1%, 25 ±10°C
	Output Frequency Resolution	Digital command:0.01Hz, Analog command: 0.03 X Max. output frequency/60Hz (±11 bit)
	Overload Tolerance	Rated output current is 150 % for 60 seconds/Rated output current is 200% for 3 seconds
	Frequency Setting Signal	+10V~-10, 0~+10V, 4~20mA, 0~20mA, Pulse input
	Accel./decel. Time	0.00~600.00/0.0~6000.0 seconds
	Main Control Function	Torque control, Droop control, Speed/torque control switching, Feed forward control, Zero-servo control, Momentary power loss ride thru, Speed search, Over-torque detection, Torque Limit, 17-step speed (Max.), Accel/decel time switch, S-curve accel/decel, 3-wire sequence, Auto-Tuning (rotational, stationary), Dwell, Cooling fan on/off switch, Slip compensation, Torque compensation, JOG frequency, Frequency upper/lower limit settings, DC injection braking at start/stop, High slip braking, PID control (with sleep function), Energy saving control, MODBUS communication (RS-485 RJ45, Max.115.2 kbps), Fault restart, Parameter copy
	Fan Control	230V model: VFD150CH23A-21(include) and series above: PMW control VFD110CH23A-21(include) and series below: on/off switch control 460V model: VFD185CH43A/4EA-21(include) and series above: PMW control VFD150CH43A/4EA-21(include) and series below: on/off switch control
Protection Characteristics	Motor Protection	Electronic thermal relay protection
	Over-current Protection	For drive model 230V and 460V over-current protection for 300% rated current ; current clamp (Super heavy duty: 220%)
	Over-Voltage Protection	230: drive will stop when DC-BUS voltage exceeds 410V 460: drive will stop when DC-BUS voltage exceeds 820V
	Over-Temperature Protection	Built-in temperature sensor
	Stall Prevention	Stall prevention during acceleration, deceleration and running independently
	Restart after Instantaneous Power Failure	Parameter setting up to 20 seconds
	Grounding Leakage Current Protection	Leakage current is higher than 50% of rated current of the AC motor drive
	International Certifications	CE UL GB/T12668-2 EAC

Wiring

Wiring Diagram for Frame A~C

*Input: 3-phase power

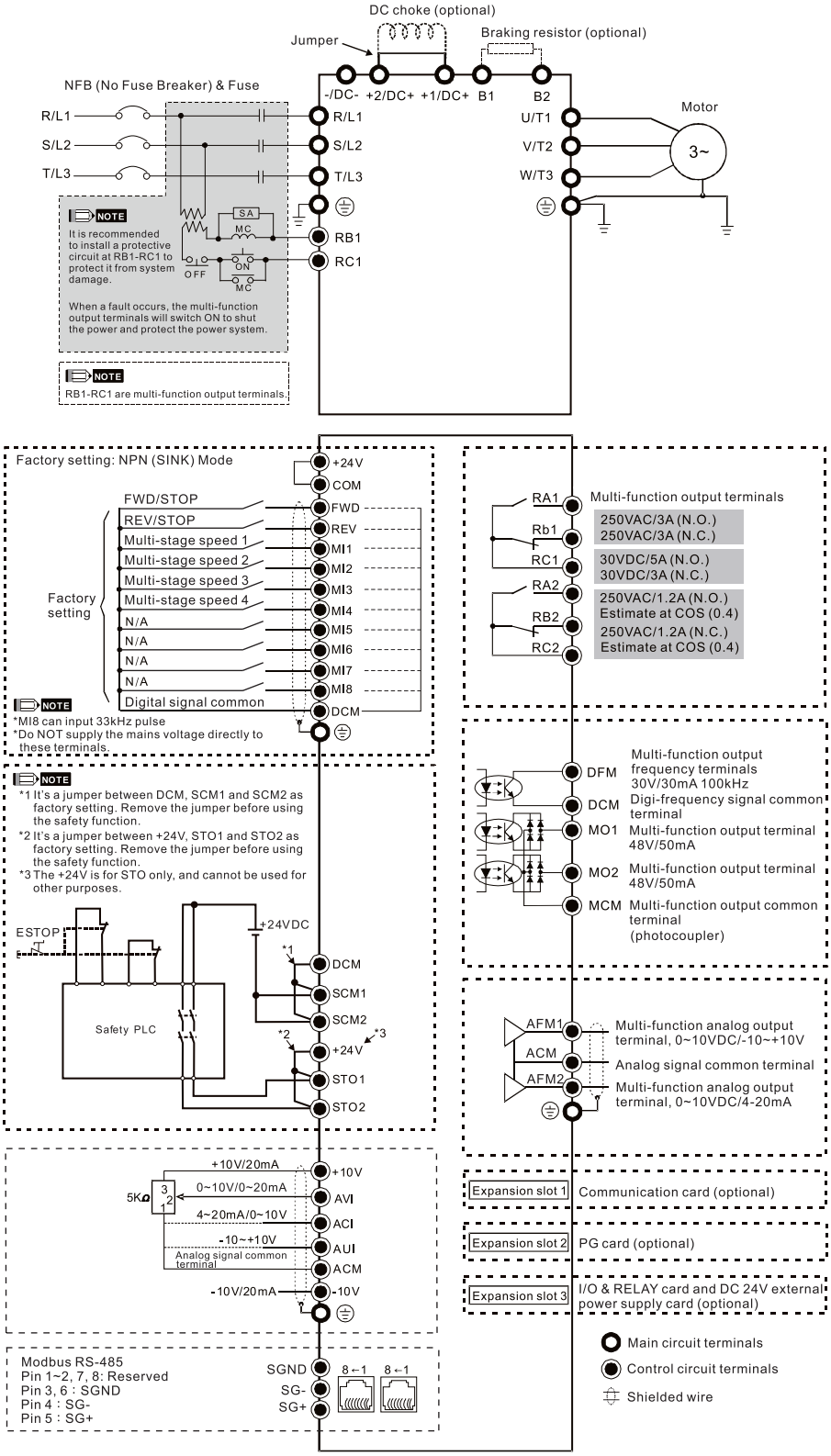

NOTE

It is not recommended to use a power capacitor or automatic power factor regulator (APFR) at the power input side. If the system requires such a device, please make sure a reactor is installed between the drive and the power capacitor or APFR.

Wiring Diagram for Frame D~F

*Input: 3-phase power

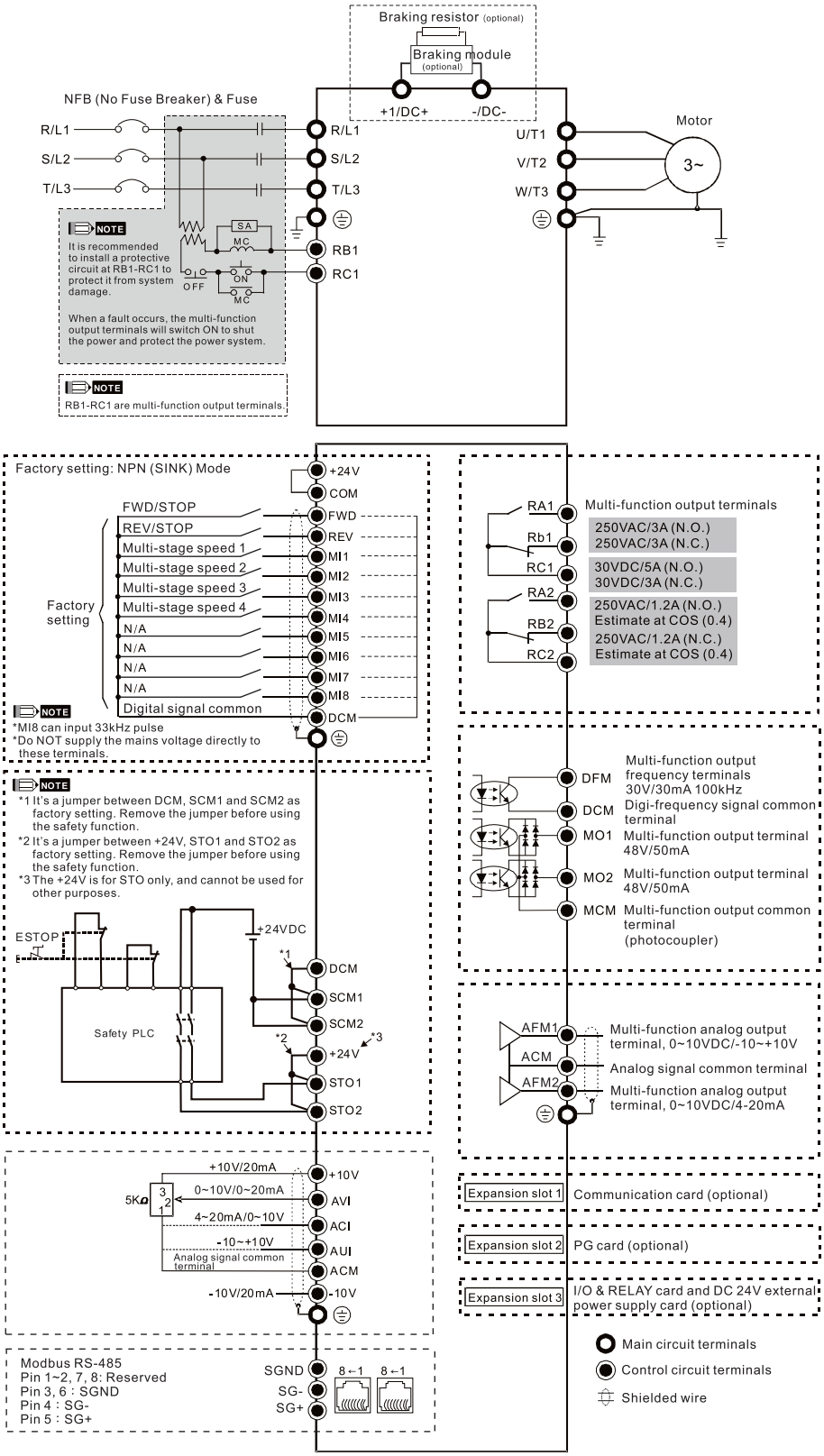

Wiring Diagram for Frame G~H

*Input: 3-phase power

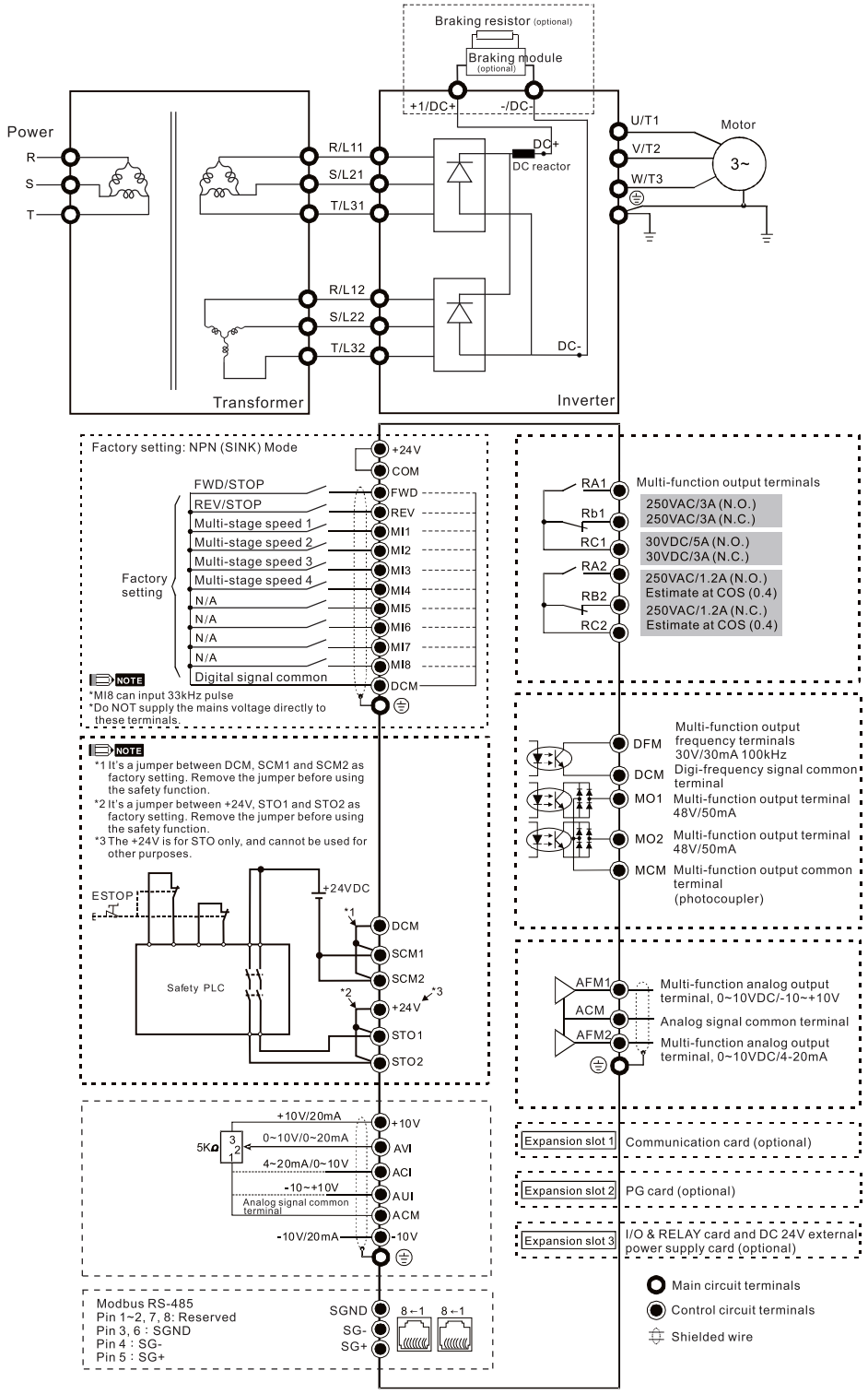

NOTE

It is not recommended to use a power capacitor or automatic power factor regulator (APFR) at the power input side. If the system requires such a device, please make sure a reactor is installed between the drive and the power capacitor or APFR.

Dimensions

Digital Keypad Unit: mm [inch]

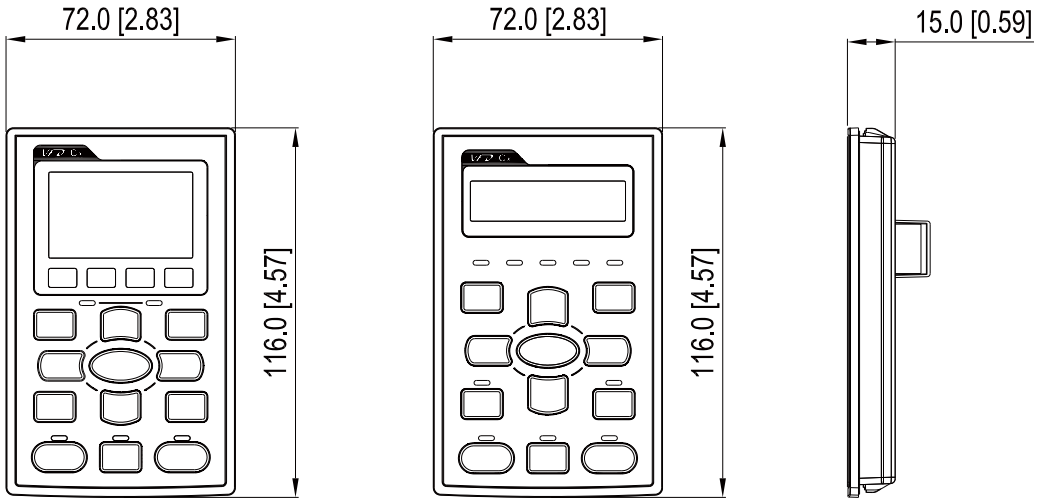

KPC-CC01
Standard LCD Digital Keypad

KPC-CE01
Optional LED Digital Keypad

Frame A

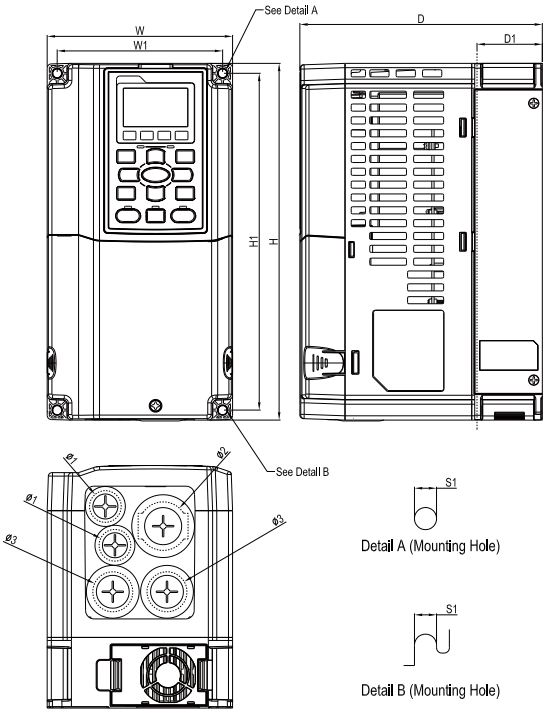

MODEL	
VFD007CH23A-21	VFD055CH43A-21
VFD015CH23A-21	VFD007CH4EA-21
VFD022CH23A-21	VFD015CH4EA-21
VFD037CH23A-21	VFD022CH4EA-21
VFD007CH43A-21	VFD037CH4EA-21
VFD015CH43A-21	VFD055CH4EA-21
VFD022CH43A-21	
VFD037CH43A-21	

Frame		W	H	D	W1	H1	D1*	S1	Ø1	Ø2	Ø3
A	mm	130.0	250.0	170.0	116.0	236.0	45.8	6.2	22.2	34.0	28.0
	inch	5.12	9.84	6.69	4.57	9.29	1.80	0.24	0.87	1.34	1.10

D1*:Flange mount

Frame B

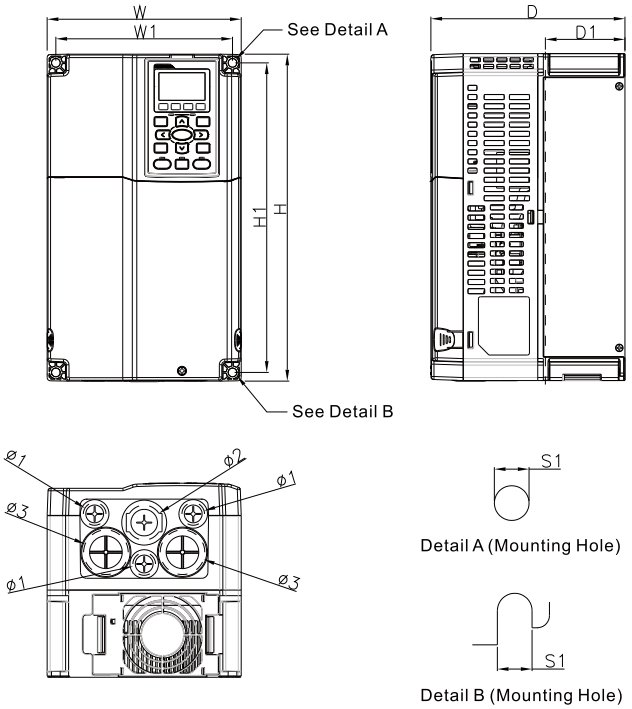

MODEL

VFD055CH23A-21
VFD075CH23A-21
VFD110CH23A-21
VFD075CH43A-21
VFD110CH43A-21
VFD150CH43A-21
VFD075CH4EA-21
VFD110CH4EA-21
VFD150CH4EA-21

Frame		W	H	D	W1	H1	D1*	S1	Ø1	Ø2	Ø3
B	mm	190.0	320.0	190.0	173.0	303.0	77.9	8.5	22.2	34.0	43.8
	inch	7.48	12.6	7.48	6.81	11.93	3.07	0.33	0.87	1.34	1.72

D1*: Flange mount

Frame C

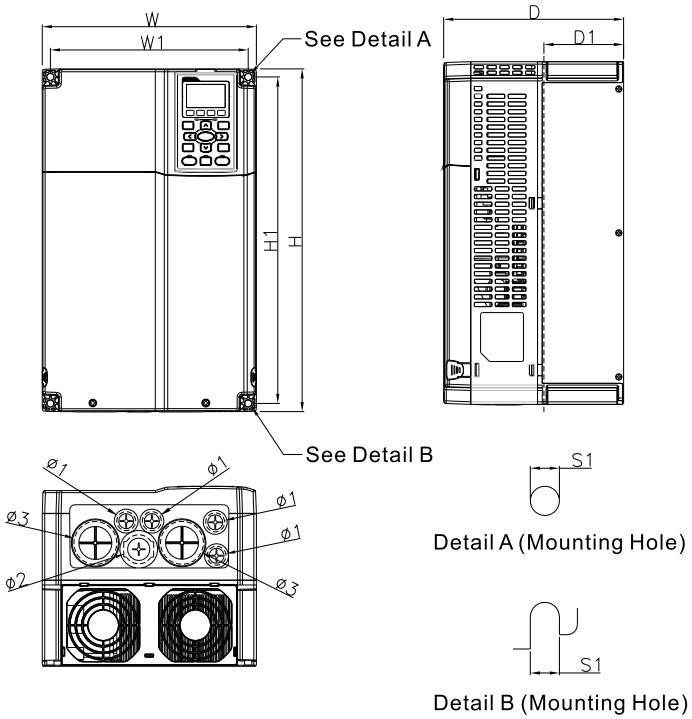

MODEL

VFD150CH23A-21
VFD185CH23A-21
VFD185CH43A-21
VFD220CH43A-21
VFD300CH43A-21
VFD185CH4EA-21
VFD220CH4EA-21
VFD300CH4EA-21

Frame		W	H	D	W1	H1	D1*	S1	Ø1	Ø2	Ø3
C	mm	250.0	400.0	210.0	231.0	381.0	92.9	8.5	22.2	34.0	50.0
	inch	9.84	15.75	8.27	9.09	15.00	3.66	0.33	0.87	1.34	1.97

D1*: Flange mount

Frame D1

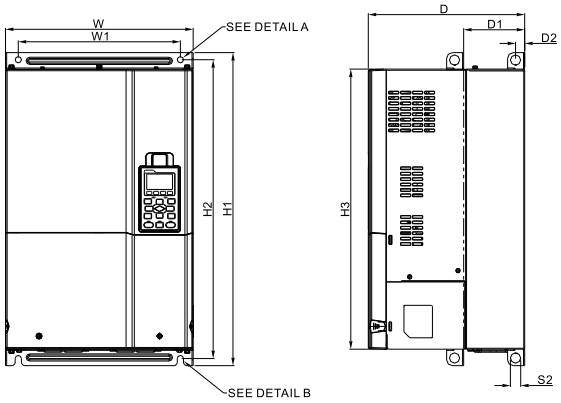

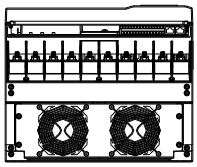

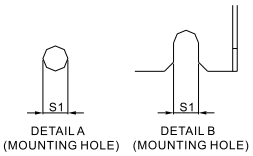

MODEL

VFD220CH23A-00
VFD300CH23A-00
VFD370CH23A-00
VFD450CH43A-00
VFD550CH43A-00
VFD750CH43A-00

Frame		W	H	D	W1	H1	H2	H3	D1*	D2	S1	S2	Ø1	Ø2	Ø3
D1	mm	330.0	-	275.0	285.0	550.0	525.0	492.0	107.2	16.0	11.0	18.0	-	-	-
	inch	12.99	-	10.83	11.22	21.65	20.67	19.37	4.22	0.63	0.43	0.71	-	-	-

D1*: Flange mount

Frame D2, D0-2

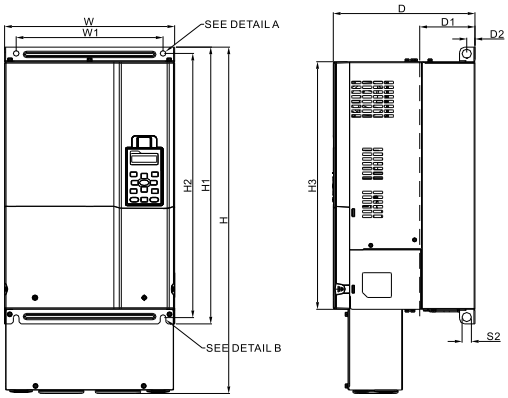

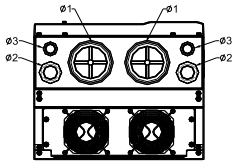

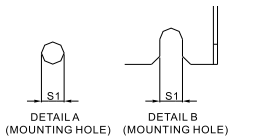

MODEL

Frame D2	Frame D0-2
VFD220CH23A-21	VFD370CH43S-21
VFD300CH23A-21	
VFD370CH23A-21	
VFD450CH43A-21	
VFD550CH43A-21	
VFD750CH43A-21	

Frame		W	H	D	W1	H1	H2	H3	D1*	D2	S1	S2	Ø1	Ø2	Ø3
D2	mm	330.0	688.3	275.0	285.0	550.0	525.0	492.0	107.2	16.0	11.0	18.0	76.2	34.0	22.0
	inch	12.99	27.10	10.83	11.22	21.65	20.6	19.37	4.22	0.63	0.43	0.71	3.00	1.34	0.87
Frame		**W**	**H**	**D**	**W1**	**H1**	**H2**	**H3**	**D1***	**D2**	**S1**	**S2**	**Ø1**	**Ø2**	**Ø3**
D0-2	mm	330.0	614.4	255.0	235.0	500.0	475.0	442.0	94.2	16.0	11.0	18.0	62.7	34.0	22.0
	inch	12.99	24.19	10.04	9.25	16.69	18.70	17.40	3.71	0.63	0.43	0.71	2.47	1.34	0.87

D1*: Flange mount

Frame E1

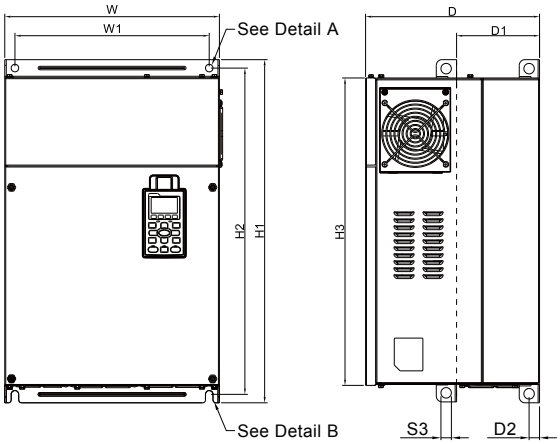

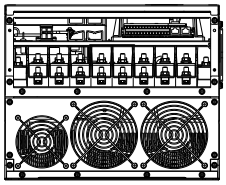

MODEL

VFD450CH23A-00
VFD550CH23A-00
VFD900CH43A-00
VFD1100CH43A-00

Frame		W	H	D	W1	H1	H2	H3	D1*	D2	S1/S2	S3	Ø1	Ø2	Ø3
E1	mm	370.0	-	300.0	335.0	589.0	560.0	528.0	143.0	18.0	13.0	18.0	-	-	-
	inch	14.57	-	11.81	13.19	23.19	22.05	20.80	5.63	0.71	0.51	0.71	-	-	-

D1*: Flange mount

Frame E2

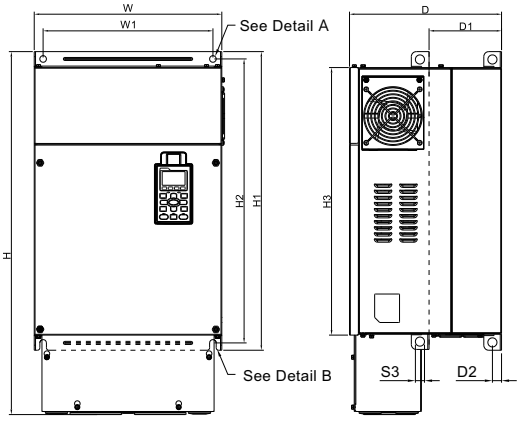

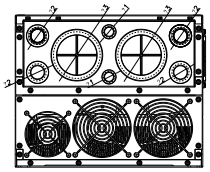

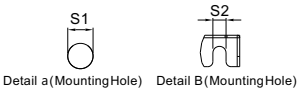

MODEL

VFD450CH23A-21
VFD550CH23A-21
VFD900CH43A-21
VFD1100CH43A-21

Frame		W	H	D	W1	H1	H2	H3	D1*	D2	S1/S2	S3	Ø1	Ø2	Ø3
E2	mm	370.0	715.8	300.0	335.0	589.0	560.0	528.0	143.0	18.0	13.0	18.0	22.0	34.0	92.0
	inch	14.57	28.18	11.81	13.19	23.19	22.05	20.80	5.63	0.71	0.51	0.7	0.87	1.34	3.62

D1*: Flange mount

Frame F1

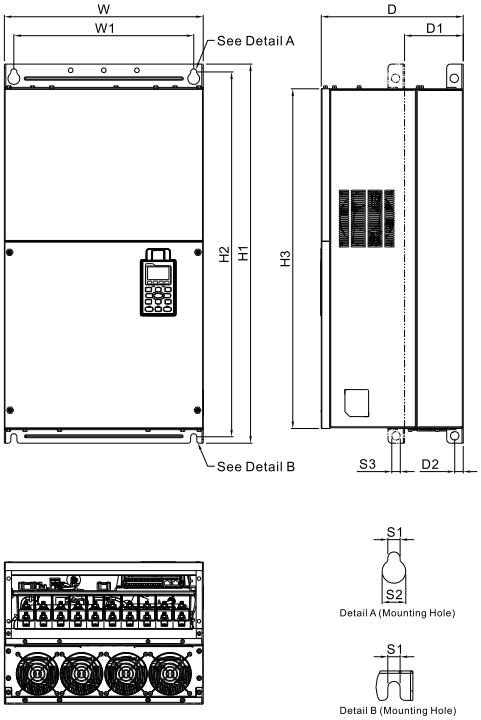

MODEL

VFD750CH23A-00
VFD1320CH43A-00

Frame		W	H	D	W1	H1	H2	H3	D1*	D2	S1	S2	S3	Ø1	Ø2	Ø3
F1	mm	420.0	-	300.0	380.0	800.0	770.0	717.0	124.0	18.0	13.0	25.0	18.0	-	-	-
	inch	16.54	-	11.81	14.96	31.50	30.32	28.23	4.88	0.71	0.51	0.98	0.71	-	-	-

D1*: Flange mount

Frame F2

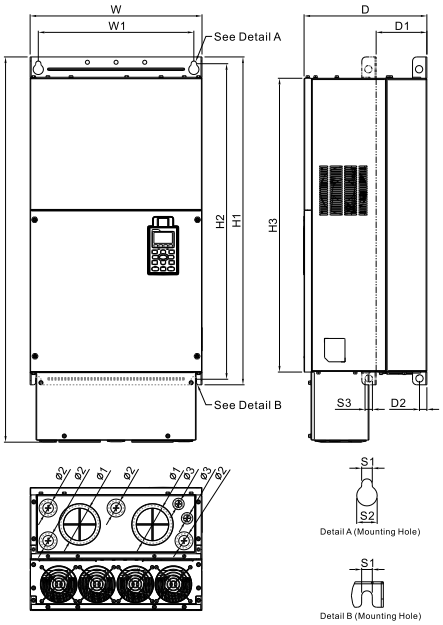

MODEL

VFD750CH23A-21
VFD1320CH43A-21

Frame		W	H	D	W1	H1	H2	H3	D1*	D2	S1	S2	S3	Ø1	Ø2	Ø3
F2	mm	420.0	940.0	300.0	380.0	800.0	770.0	717.0	124.0	18.0	13.0	25.0	18.0	92.0	35.0	22.0
	inch	16.54	37.00	11.81	14.96	31.5	30.32	28.23	4.88	0.71	0.51	0.98	0.71	3.62	1.38	0.87

D1*: Flange mount

Frame G1

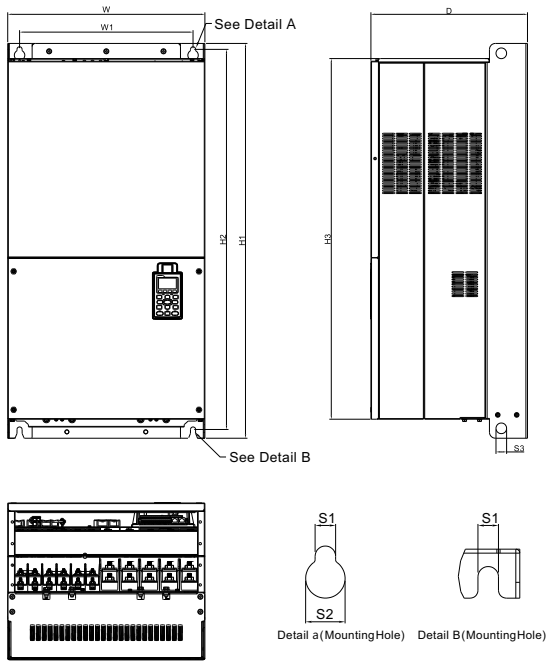

MODEL

VFD1600CH43A-00
VFD1850CH43A-00
VFD2200CH43A-00

Frame		W	H	D	W1	H1	H2	H3	S1	S2	S3	Ø1	Ø2	Ø3
G1	mm	500.0	-	397.0	440.0	1000.0	963.0	913.6	13.0	26.5	27.0	-	-	-
	inch	19.69	-	15.63	217.32	39.37	37.91	35.97	0.51	1.04	1.06	-	-	-

Frame G2

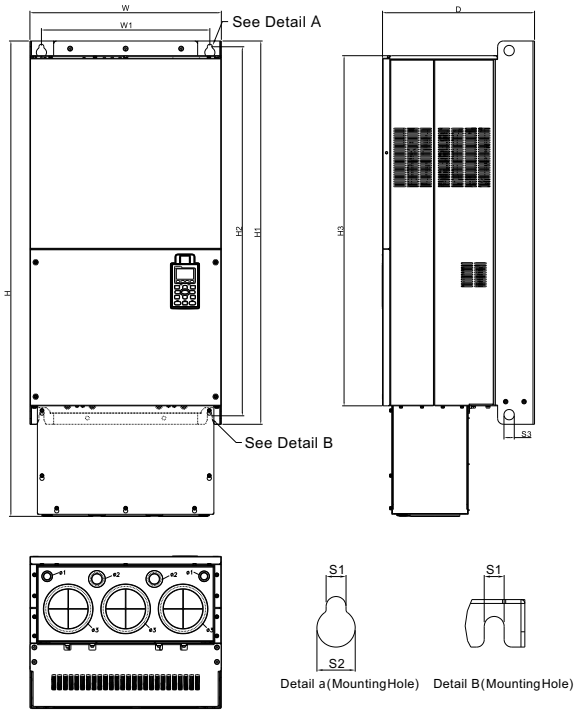

MODEL

VFD1600CH43A-21
VFD1850CH43A-21
VFD2200CH43A-21

Frame		W	H	D	W1	H1	H2	H3	S1	S2	S3	Ø1	Ø2	Ø3
G2	mm	500.0	1240.2	397.0	440.0	1000.0	963.0	913.6	13.0	26.5	27.0	22.0	34.0	117.5
	inch	19.69	48.83	15.63	217.32	39.37	37.91	35.97	0.51	1.04	1.06	0.87	1.34	4.63

Frame H1

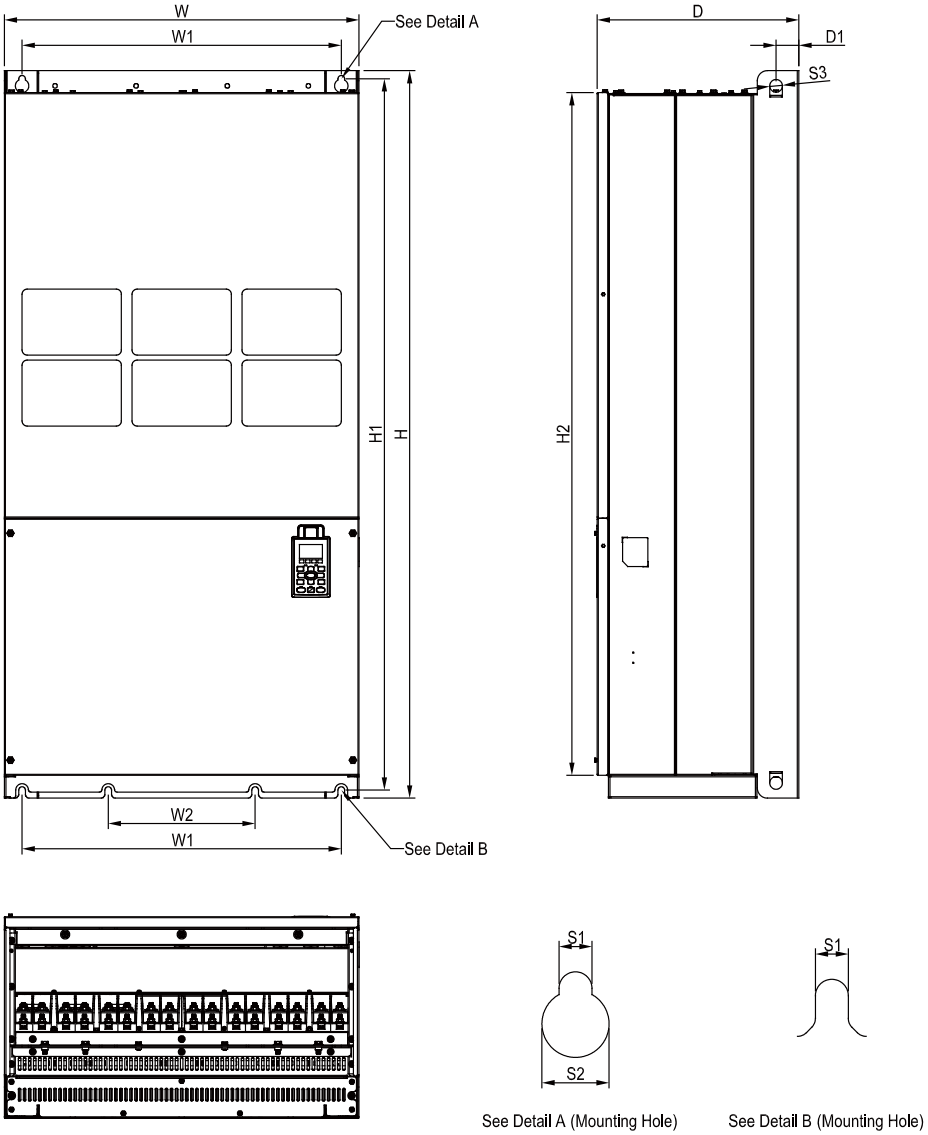

MODEL

VFD2800CH43A-00

Frame		W	H	D	W1	W2	W3	W4	W5	W6	H1	H2	H3	H4
H1	mm	700.0	1435.0	398.0	630.0	290.0	-	-	-	-	1403.0	1346.0	-	-
	inch	27.56	56.5	15.67	24.8	11.42	-	-	-	-	55.24	53.02	-	-
Frame		**H5**	**D1**	**D2**	**D3**	**D4**	**D5**	**D6**	**S1**	**S2**	**S3**	**Ø1**	**Ø2**	**Ø3**
H1	mm	-	45.0	-	-	-	-	-	13.0	26.5	25.0	-	-	-
	inch	-	1.77	-	-	-	-	-	0.51	1.04	0.98	-	-	-

Frame H2

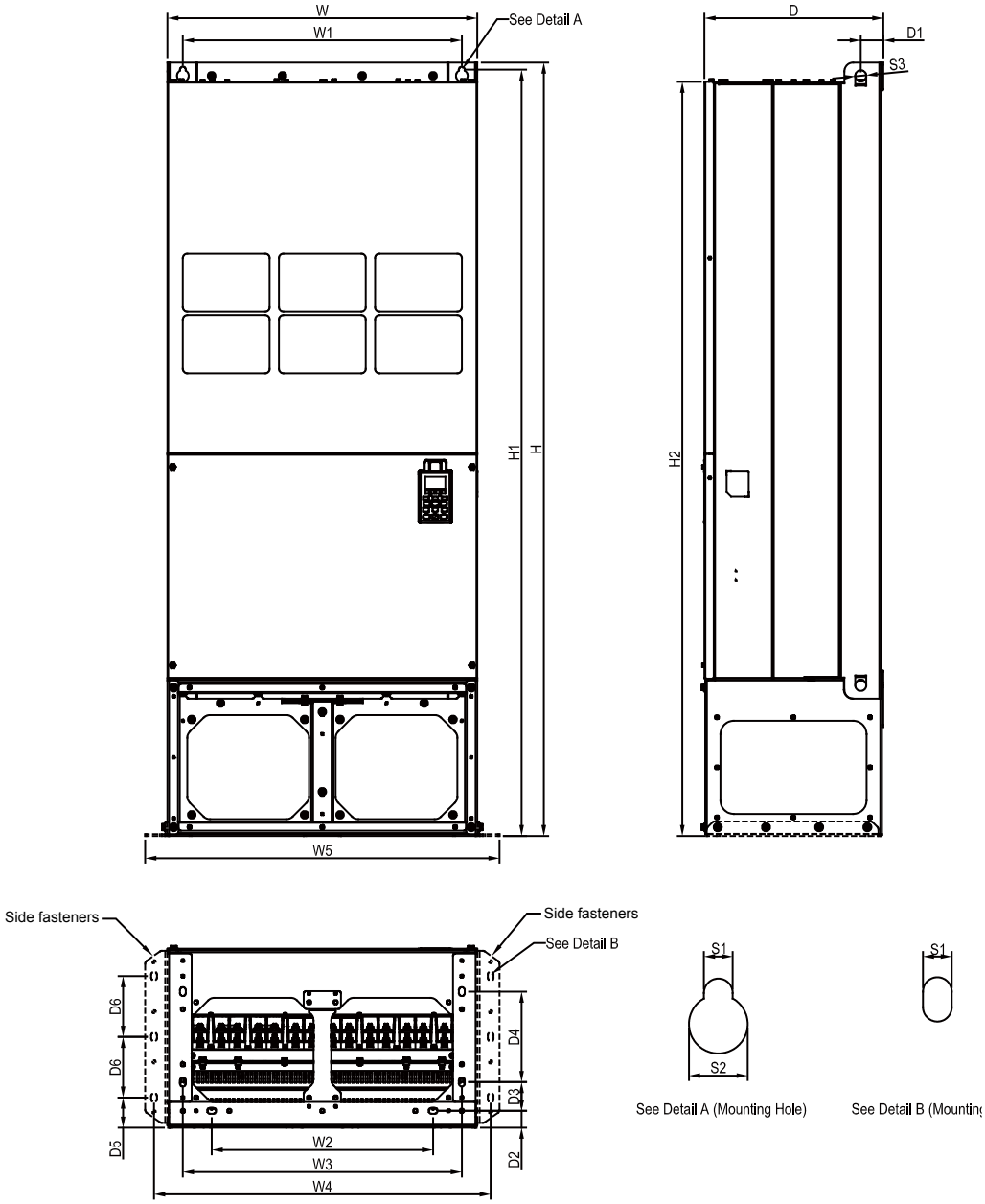

MODEL

VFD2800CH43C-00

Frame		W	H	D	W1	W2	W3	W4	W5	W6	H1	H2	H3	H4
H2	mm	700.0	1745.0	404.0	630.0	500.0	630.0	760.0	800.0	-	1729.0	1701.6	-	-
	inch	27.56	68.70	15.9	24.8	19.69	24.80	29.92	31.50	-	68.07	66.99	-	-
Frame		**H5**	**D1**	**D2**	**D3**	**D4**	**D5**	**D6**	**S1**	**S2**	**S3**	**Ø1**	**Ø2**	**Ø3**
H2	mm	-	51.0	38.0	65.0	204.0	68.0	137.0	13.0	26.5	25.0	-	-	-
	inch	-	2.0	1.50	2.56	8.03	2.68	5.4	0.51	1.04	0.98	-	-	-

Frame H3

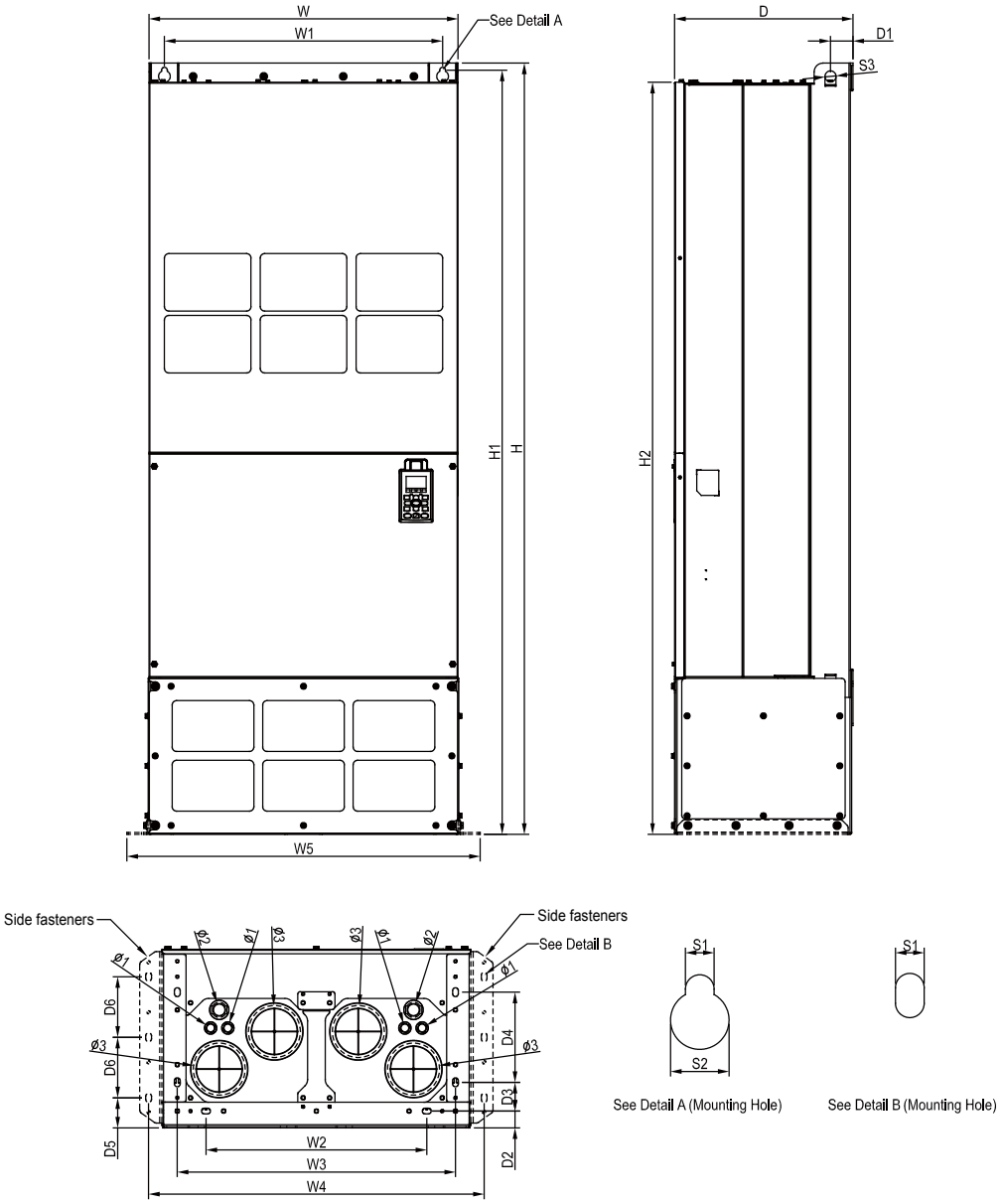

MODEL

VFD2800CH43C-21

Frame		W	H	D	W1	W2	W3	W4	W5	W6	H1	H2	H3	H4
H3	mm	700.0	1745.0	404.0	630.0	500.0	630.0	760.0	800.0	-	1729.0	1701.6	-	-
	inch	27.56	68.70	15.9	24.80	19.69	24.80	29.92	31.50	-	68.07	66.99	-	-
Frame		**H5**	**D1**	**D2**	**D3**	**D4**	**D5**	**D6**	**S1**	**S2**	**S3**	**Ø1**	**Ø2**	**Ø3**
H3	mm	-	51.0	38.0	65.0	204.0	68.0	137.0	13.0	26.5	25.0	22.0	34.0	117.5
	inch	-	2.0	1.50	2.56	8.03	2.68	5.4	0.51	1.04	0.98	0.87	1.34	4.63

Accessories

EMC-PG01L / EMC-PG02L

Set by
Pr.10-00～10-02

Terminals		Description
PG1	VP	Output voltage for power: +5V/+12V±5% (use FSW3 to switch +5V/+12V) Max. output current: 200mA
	DCM	Common for power and signal
	A1, /A1 ,B1, /B1, Z1, /Z1	Encoder input signal (Line Driver) Open collector input: +5 V / +24 V (Note1) 1-phase or 2-phase input Max. input frequency: EMC-PG01L: 300KHz; EMC-PG02L: 30KHz
PG2	A2, /A2, B2, /B2	Pulse input signal (Line Driver or Open Collector) Open collector input: +5V/+24V (Note1) 1-phase or 2-phase input Max. input frequency: EMC-PG01L: 300KHz; EMC-PG02L: 30KHz
PG OUT	AO, /AO, BO, /BO, ZO, /ZO, SG	PG card output signals. Division frequency function: 1～255 times Max. output voltage for Line driver: 5 V_{DC} Max. output current: 50mA Max. output frequency: EMC-PG01L: 300KHz; EMC-PG02L: 30KHz SG: The GND of PG card is the same as the host controller or PLC, so a common output signal is attained.

EMC-PG01O / EMC-PG02O

Set by
Pr.10-00～10-02

Terminals		Description
PG1	VP	Output voltage for power: +5V/+12V±5% (use FSW3 to switch +5V/+12V) Max. output current: 200mA
	DCM	Common for power and signal
	A1, /A1 ,B1, /B1, Z1, /Z1	Encoder input signal (Line Driver or Open Collector) Open collector input: +5V/+24V (Note1) 1-phase or 2-phase input Max. input frequency: EMC-PG01O: 300KHz; EMC-PG02O: 30KHz
PG2	A2, /A2, B2, /B2	Pulse input signal (Line Driver or Open Collector) Open collector input: +5V/+24V (Note1) 1-phase or 2-phase input Max. input frequency: EMC-PG01O: 300KHz; EMC-PG02O: 30KHz
PG OUT	V+, /V-	Needs external power source for PG OUT circuit. Input voltage of power:+12V～+24V
	V-	Negative power supply input
	A/O, B/O, Z/O	PG card output signals. Division frequency function: 1～255 times Add a pull-up resistor to the open collector output signals to avoid signal interferences. [Three pull-up resistors are included in the package (1.8kΩ/1W)] Max. Output current: 20mA Max output frequency: EMC-PG01O: 300KHz; EMC-PG02O: 30KHz

EMC-PG01R

Set by
Pr.10-00～10-02

Terminals		Description
PG1	R1-R2	Resolver output power 7Vrms, 10 kHz
	S1, S2, S3, S4	Resolver input signal 3.5±0.175Vrms, 10 kHz
PG2	A2, /A2, B2, /B2	Pulse input signal (Line Driver or Open Collector) Open collector input: +5V/+24V (Note1) 1-phase or 2-phase input; Max. input frequency: 300KHZ
PG OUT	AO, /AO, BO, /BO, ZO, /ZO, SG	PG card output signals. Division frequency function: 1～255 times Max. output voltage for Line driver: 5 V_{DC} Max. output current: 50mA Max. output frequency: 300KHz SG: The GND of PG card is the same as the host controller or PLC, so a common output signal is attained.

EMC-PG01U / EMC-PG02U

FJMP1 S : Standard UVW Output Encoder; D : Delta Encoder

Set by Pr.10-00～10-02

Terminals		Description
PG1	VP	Output voltage for power: +5V/+12V±5% (use FSW3 to switch +5V/+12V) Max. output current: 200mA
	DCM	Common for power and signal
	A1, /A1 ,B1, /B1, Z1, /Z1	Encoder input signal (Line Driver) 1-phase or 2-phase input. Max. input frequency: 300KHz
	U1, /U1, V1, /V1, W1, /W1	Encoder input signal
PG2	A2, /A2, B2, /B2	Pulse input signal Open collector input: +5V/+24V (Note1) 1-phase or 2-phase input Max. input frequency: 300KHz
PG OUT	AO, /AO, BO, /BO, ZO, /ZO, SG	PG card output signals. Division frequency function: 1～255 times Max. output voltage for Line driver: $5V_{DC}$ Max. output current: 50mA Max. output frequency: 300KHz SG: The GND of PG card is the same as the host controller or PLC, so a common output signal is attained.

Note 1: For the Open Collector, set input voltage to 5～15mA and install a pull-up resistor
【5V】 Recommend pull-up resistor: 100～220Ω, 1/2W and above
【12V】 Recommend pull-up resistor: 510～1.35kΩ, 1/2W and above
【24V】 Recommend pull-up resistor: 1.8k～3.3kΩ, 1/2W and above

EMC-D42A

I/O Extension Card

Terminals	Description
COM	Common for multi-function input terminals Select SINK (NPN)/SOURCE (PNP) in J1 jumper/external power supply
MI10～MI13	Refer to Pr. 02-26～Pr. 02-29 to program the multi-function inputs MI10～MI13. Internal power is applied from terminal E24: +24 V_{DC}±5% 200mA, 5W External power +24 V_{DC}: max. voltage 30 V_{DC}, min. voltage 19 V_{DC}, 30W ON: the activation current is 6.5mA; OFF: leakage current tolerance is 10μA
MO10～MO11	Multi-function output terminals (photocoupler) Duty-cycle: 50%; Max. output frequency: 100 Hz Max. current: 50mA; Max. voltage: 48 V_{DC}
MXM	Common for multi-function output terminals MO10, MO11(photocoupler) Max 48 V_{DC} 50mA

EMC-D611A

I/O Extension Card

Terminals	Description
AC	AC power common for multi-function input terminal (Neutral)
MI10～Mi15	Refer to Pr. 02-26～Pr. 02-31 for multi-function input selection Input voltage: 100～130 V_{AC}; Input frequency: 57～63 Hz Input impedance: 27Kohm Terminal response time: ON: 10ms; OFF: 20ms

EMC-R6AA

Relay Extension Card

Terminals	Description
RA10~RA15 RC10~RC15	Refer to Pr. 02-36~Pr. 02-41 for multi-function output selection Resistive load: 3A(N.O.)/250 V_{AC} 5A(N.O.)/30 V_{DC} Inductive load (COS 0.4) 2.0A(N.O.)/250 V_{AC} 2.0A(N.O.)/30 V_{DC} It is used to output each monitor signal, such as for drive in operation, frequency attained or overload indication.

EMC-A22A

Analog I/O extension card

Terminals	Description
AVI10 AVI11	Refer to Pr. 14-00~Pr. 14-01 for function selection (input), and Pr. 14-18~Pr. 14-19 for mode selection. There are two sets of AVI port, SSW3(AVI10) and SSW4(AVI11), which can be switched to AVI or ACI. AVI: Input 0~10V ACI: Input 0~20mA / 4~20mA
AFM10 AFM11	Refer to Pr. 14-12~Pr. 14-13 for function selection (output), and Pr. 14-36~Pr. 14-37 for mode selection. There are two sets of AFM port, SSW1(AFM10) and SSW2(AFM11), which can be switched to AVO or ACO. AVO: Output 0~10.00V ACO: Output 0~20.0mA / 4.0~20.0mA
ACM	Analog signal common terminal

EMC-BPS01

24V Power Shift Card

Terminals	Description
24V GND	When the AC motor drive power is off, the external power supply card provides external power to the network system, PLC function, and other functions to allow continued operations. Input power: 24 V_{DC} ±5% Maximum input current: 0.5A Note: Do not connect the control terminal +24V (Digital control signal common: SOURCE) directly to the EMC-BPS01 input terminal 24V. Do not connect control terminal GND directly to the EMC-BPS01 input terminal GND.

CMC-PD01

Features

- Supports PROFIBUS DP protocol
- Supports PZD control data exchange
- Supports PKW polling AC motor drive parameters
- Supports user diagnosis function
- Auto-detects baud rates; supports Max. 12 Mbps

PROFIBUS DP Connector

Interface	DB9 connector
Transmission method	High-speed RS-485
Transmission cable	Shielded twisted pair cable
Electrical isolation	500 V_{DC}

Communication

Message type	Cyclic data exchange
Module name	CMC-PD01
GSD document	DELA08DB.GSD
Company ID	08DB (HEX)
Serial transmission speed supported (auto-detection)	9.6 Kbps; 19.2 Kbps; 93.75 Kbps; 187.5 Kbps; 125 Kbps; 250 Kbps; 500 Kbps; 1.5 Mbps; 3 Mbps; 6 Mbps; 12 Mbps (bit per second)

CMC-PN01 NEW

Features

- Supports PROFINET IO device
- Supports synchronous data transmission and synchronous parameter access
- Provides GSDML file for PROFINET communication

Network Interface

Interface	RJ-45	**Transmission Cable**	Category 5e shielding 100M
Number of Ports	2 Ports	**Transmission Speed**	10/100 Mbps auto-negotiate
Transmission Method	IEEE 802.3	**Network Protocol**	PROFINET

CMC-EC01 NEW

Features

- Supports EtherCAT protocol
- Supports standard CiA402 speed mode
- Supports SDO (Service Data Objects) function:
  - To write motor drive parameters
  - To read motor drive information
- Auto shutdown function for interruptions during data transmission

Network Interface

Interface	RJ-45	**Transmission speed**	100 Mbps
Number of ports	2 Ports	**Network protocol**	EtherCAT
Transmission method	IEEE 802.3, IEEE 802.3u		
Transmission cable	Category 5e shielding 100 M		

CMC-EIP01

Features

- Supports EtherNet/IP and MODBUS TCP protocol
- User-defined parameter mapping
- IP Filter, basic firewall function

Network Interface

Interface	RJ-45 with Auto MDI/MDIX	**Transmission cable**	Category 5e shielding 100 M
Number of ports	1 Port	**Transmission speed**	10/100 Mbps Auto-Detect
Transmission method	IEEE 802.3, IEEE 802.3u	**Network protocol**	ICMP, IP, TCP, UDP, DHCP, BOOTP, SMTP, EtherNet/IP, Modbus TCP

CMC-DN01

Features

- Supports all baud rates on DeviceNet bus: 125 Kbps, 250 Kbps, 500 Kbps and extendable serial transmission speed mode
- Based on the high-speed communication interface of Delta HSSP protocol, able to conduct immediate control of an AC motor drive
- Supports Group 2 only connection and polling I/O data exchange
- For I/O mapping, supports Max. 32 words of input and 32 words of output
- Supports EDS file configuration in DeviceNet configuration software
- Node address and serial transmission speed can be set up on AC motor drive
- Power supplied from AC motor drive

DeviceNet Connector

Interface	5-Pin 5.08mm pluggable connector
Transmission method	CAN
Transmission cable	Shielded twisted pair cable (with 2 power cables)
Transmission speed	125Kbps, 250Kbps, 500Kbps and extendable serial transmission speed mode
Network protocol	DeviceNet protocol

DeviceNet Connector

Interface	50 PIN communication terminal
Transmission method	SPI communication
Terminal function	1. Communicating with AC motor drive 2. Transmitting power supply from AC motor drive
Communication protocol	Delta HSSP protocol

EMC-COP01

RJ-45 Pin definition

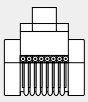

Male

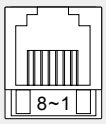

Female

Pin	Pin name	Definition
1	CAN_H	CAN_H bus line (dominant high)
2	CAN_L	CAN_L bus line (dominant low)
3	CAN_GND	Ground/0 V/V-
6	CAN_GND	Ground/0 V/V-

Network Interface

Interface	RJ-45
Number of ports	1 Port
Transmission method	CAN
Transmission cable	CAN standard cable
Transmission speed	50Kbps, 100Kbps, 125Kbps, 250Kbps, 500Kbps, 1Mbps
Communication protocol	CANopen

Delta Standard Fieldbus Cables

Delta Cables	Part Number	Description	Length
CANopen Cable	UC-CMC003-01A	CANopen cable, RJ45 connector	0.3 m
	UC-CMC005-01A	CANopen cable, RJ45 connector	0.5 m
	UC-CMC010-01A	CANopen cable, RJ45 connector	1 m
	UC-CMC015-01A	CANopen cable, RJ45 connector	1.5 m
	UC-CMC020-01A	CANopen cable, RJ45 connector	2 m
	UC-CMC030-01A	CANopen cable, RJ45 connector	3 m
	UC-CMC050-01A	CANopen cable, RJ45 connector	5 m
	UC-CMC100-01A	CANopen cable, RJ45 connector	10 m
	UC-CMC200-01A	CANopen cable, RJ45 connector	20 m
DeviceNet Cable	UC-DN01Z-01A	DeviceNet cable	305 m
	UC-DN01Z-02A	DeviceNet cable	305 m
EtherNet / EtherCAT Cable	UC-EMC003-02A	EtherNet/EtherCAT cable, Shielding	0.3 m
	UC-EMC005-02A	EtherNet/EtherCAT cable, Shielding	0.5 m
	UC-EMC010-02A	EtherNet/EtherCAT cable, Shielding	1 m
	UC-EMC020-02A	EtherNet/EtherCAT cable, Shielding	2 m
	UC-EMC050-02A	EtherNet/EtherCAT cable, Shielding	5 m
	UC-EMC100-02A	EtherNet/EtherCAT cable, Shielding	10 m
	UC-EMC200-02A	EtherNet/EtherCAT cable, Shielding	20 m
CANopen/DeviceNet TAP	TAP-CN01	1 in 2 out, built-in 121Ω terminal resistor	1 in 2 out
	TAP-CN02	1 in 4 out, built-in 121Ω terminal resistor	1 in 4 out
	TAP-CN03	1 in 4 out, RJ45 connector, built-in 121Ω terminal resistor	1 in 4 out
PROFIBUS Cable	UC-PF01Z-01A	PROFIBUS DP cable	305 m

Unit: mm

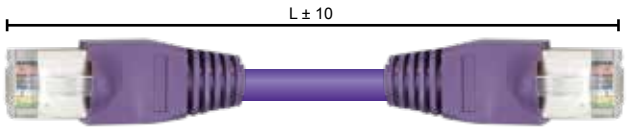

CANopen Breakout Box

Model: TAP-CN03
Unit: mm [inch]

Ordering Information

Frame Size		Power Range	Models		
Frame A		**230 V:** 0.75 kW ~ 3.7 kW **460 V:** 0.75 kW ~ 5.5 kW	VFD007CH23A-21 VFD015CH23A-21 VFD022CH23A-21 VFD037CH23A-21	VFD007CH43A-21 VFD015CH43A-21 VFD022CH43A-21 VFD037CH43A-21 VFD055CH43A-21	VFD007CH4EA-21 VFD015CH4EA-21 VFD022CH4EA-21 VFD037CH4EA-21 VFD055CH4EA-21
Frame B		**230 V:** 5.5 kW ~ 11 kW **460 V:** 7.5 kW ~ 15 kW	VFD055CH23A-21 VFD075CH23A-21 VFD110CH23A-21	VFD075CH43A-21 VFD110CH43A-21 VFD150CH43A-21	VFD075CH4EA-21 VFD110CH4EA-21 VFD150CH4EA-21
Frame C		**230 V:** 15 kW ~ 18.5 kW **460 V:** 18.5 kW ~ 30 kW	VFD150CH23A-21 VFD185CH23A-21	VFD185CH43A-21 VFD220CH43A-21 VFD300CH43A-21	VFD185CH4EA-21 VFD220CH4EA-21 VFD300CH4EA-21
Frame D		**230 V:** 22 kW ~ 37 kW **460 V:** 37 kW ~ 75 kW	**Frame D1:** VFD220CH23A-00 VFD300CH23A-00 VFD370CH23A-00 VFD450CH43A-00 VFD550CH43A-00 VFD750CH43A-00	**Frame D2:** VFD220CH23A-21 VFD300CH23A-21 VFD370CH23A-21 VFD450CH43A-21 VFD550CH43A-21 VFD750CH43A-21	**Frame D0-2:** VFD370CH43S-21
Frame E		**230 V:** 45 kW ~ 55 kW **460 V:** 90 kW ~ 110 kW	**Frame E1:** VFD450CH23A-00 VFD550CH23A-00 VFD900CH43A-00 VFD1100CH43A-00	**Frame E2:** VFD450CH23A-21 VFD550CH23A-21 VFD900CH43A-21 VFD1100CH43A-21	
Frame F		**230 V:** 75 kW **400 V:** 132 kW	**Frame F1:** VFD750CH23A-00 VFD1320CH43A-00	**Frame F2:** VFD750CH23A-21 VFD1320CH43A-21	
Frame G		**460 V:** 160 kW ~ 220 kW	**Frame G1:** VFD1600CH43A-00 VFD1850CH43A-00 VFD2200CH43A-00	**Frame G2:** VFD1600CH43A-21 VFD1850CH43A-21 VFD2200CH43A-21	

Frame Size		Power Range	Models		
			Frame H1:	Frame H2:	Frame H3:
Frame H		**460 V:** 280 kW	VFD2800CH43A-00	VFD2800CH43C-00	VFD2800CH43C-21

Model Name Explanation

VFD 1100 CH 43 A - 2 1

NEMA Protection Level

0	UL Open Type
1	NEMA 1

IP Protection Level

0	IP00
2	IP20

Installation Types

A.S	Wall Mount
C	Floor Mount

Input Voltage / Phase

23	230V 3-phase
43	460V 3-phase
4E	460V 3-phase (Built-in EMC filter)

Product Series

CH	CH2000

Applicable Motor Capacity

007	0.75 kW	075	7.5 kW	300	30 kW	900	90 kW	2200	220 kW
015	1.5 kW	110	11 kW	370	37 kW	1100	110 kW	2800	280 kW
022	2.2 kW	150	15 kW	450	45 kW	1320	132 kW		
037	3.7 kW	185	18.5 kW	550	55 kW	1600	160 kW		
055	5.5 kW	220	22 kW	750	75 kW	1850	180 kW		

Product

Variable Frequency Drive

Smarter. Greener. Together.

Industrial Automation Headquarters

Taiwan: Delta Electronics, Inc.
Taoyuan Technology Center
No.18, Xinglong Rd., Taoyuan District,
Taoyuan City 33068, Taiwan
TEL: +886-3-362-6301 / FAX: +886-3-371-6301

Asia

China: Delta Electronics (Shanghai) Co., Ltd.
No.182 Minyu Rd., Pudong Shanghai, P.R.C.
Post code : 201209
TEL: +86-21-6872-3988 / FAX: +86-21-6872-3996
Customer Service: 400-820-9595

Japan: Delta Electronics (Japan), Inc.
Industrial Automation Sales Department
2-1-14 Shibadaimon, Minato-ku
Tokyo, Japan 105-0012
TEL: +81-3-5733-1155 / FAX: +81-3-5733-1255

Korea: Delta Electronics (Korea), Inc.
1511, 219, Gasan Digital 1-Ro., Geumcheon-gu,
Seoul, 08501 South Korea
TEL: +82-2-515-5305 / FAX: +82-2-515-5302

Singapore: Delta Energy Systems (Singapore) Pte Ltd.
4 Kaki Bukit Avenue 1, #05-04, Singapore 417939
TEL: +65-6747-5155 / FAX: +65-6744-9228

India: Delta Electronics (India) Pvt. Ltd.
Plot No.43, Sector 35, HSIIDC Gurgaon,
PIN 122001, Haryana, India
TEL: +91-124-4874900 / FAX: +91-124-4874945

Thailand: Delta Electronics (Thailand) PCL.
909 Soi 9, Moo 4, Bangpoo Industrial Estate (E.P.Z),
Pattana 1 Rd., T.Phraksa, A.Muang,
Samutprakarn 10280, Thailand
TEL: +66-2709-2800 / FAX: +66-2709-2827

Australia: Delta Electronics (Australia) Pty Ltd.
Unit 20-21/45 Normanby Rd., Notting Hill Vic 3168, Australia
TEL: +61-3-9543-3720

Americas

USA: Delta Electronics (Americas) Ltd.
5101 Davis Drive, Research Triangle Park, NC 27709, U.S.A.
TEL: +1-919-767-3813 / FAX: +1-919-767-3969

Brazil: Delta Electronics Brazil
Rua Itapeva, 26 - 3°, andar Edificio Itapeva,
One - Bela Vista 01332-000 - São Paulo - SP - Brazil
TEL: +55-12-3932-2300 / FAX: +55-12-3932-237

Mexico: Delta Electronics International Mexico S.A. de C.V.
Gustavo Baz No. 309 Edificio E PB 103
Colonia La Loma, CP 54060
Tlalnepantla, Estado de México
TEL: +52-55-3603-9200

EMEA

EMEA Headquarters: Delta Electronics (Netherlands) B.V.
Sales: Sales.IA.EMEA@deltaww.com
Marketing: Marketing.IA.EMEA@deltaww.com
Technical Support: iatechnicalsupport@deltaww.com
Customer Support: Customer-Support@deltaww.com
Service: Service.IA.emea@deltaww.com
TEL: +31(0)40 800 3900

BENELUX: Delta Electronics (Netherlands) B.V.
Automotive Campus 260, 5708 JZ Helmond, The Netherlands
Mail: Sales.IA.Benelux@deltaww.com
TEL: +31(0)40 800 3900

DACH: Delta Electronics (Netherlands) B.V.
Coesterweg 45, D-59494 Soest, Germany
Mail: Sales.IA.DACH@deltaww.com
TEL: +49(0)2921 987 0

France: Delta Electronics (France) S.A.
ZI du bois Challand 2, 15 rue des Pyrénées,
Lisses, 91090 Evry Cedex, France
Mail: Sales.IA.FR@deltaww.com
TEL: +33(0)1 69 77 82 60

Iberia: Delta Electronics Solutions (Spain) S.L.U
Ctra. De Villaverde a Vallecas, 265 1º Dcha Ed.
Hormigueras – P.I. de Vallecas 28031 Madrid
TEL: +34(0)91 223 74 20

Carrer Llacuna 166, 08018 Barcelona, Spain
Mail: Sales.IA.Iberia@deltaww.com

Italy: Delta Electronics (Italy) S.r.l.
Via Meda 2–22060 Novedrate(CO)
Piazza Grazioli 18 00186 Roma Italy
Mail: Sales.IA.Italy@deltaww.com
TEL: +39 039 8900365

Russia: Delta Energy System LLC
Vereyskaya Plaza II, office 112 Vereyskaya str.
17 121357 Moscow Russia
Mail: Sales.IA.RU@deltaww.com
TEL: +7 495 644 3240

Turkey: Delta Greentech Elektronik San. Ltd. Sti. (Turkey)
Şerifali Mah. Hendem Cad. Kule Sok. No:16-A
34775 Ümraniye – İstanbul
Mail: Sales.IA.Turkey@deltaww.com
TEL: + 90 216 499 9910

MEA: Eltek Dubai (Eltek MEA DMCC)
OFFICE 2504, 25th Floor, Saba Tower 1,
Jumeirah Lakes Towers, Dubai, UAE
Mail: Sales.IA.MEA@deltaww.com
TEL: +971(0)4 2690148

*We reserve the right to change the information in this catalogue without prior notice.

DELTA_IA-MDS_CH2000_C_EN_20210623